Clemas & Co Ltd
Industrial Cleaning Equipment
Sales - Hire - Service

CTT40 HAZARDOUS VACUUM CLEANER OPERATOR MANUAL

Clemas & Co. Unit 5 Ashchurch Business Centre, Alexandra Way, Tewkesbury, Gloucestershire, GL20 8NB.
Tel: 01684 850777 **Fax**: 01684 850707
Email: info@clemas.co.uk **Web**: www.clemas.co.uk

Translation of original instructions

Table of contents

Instructions for use 2
Operator's safety 2
General information for using the vacuum cleaner 2
Proper uses 2
Improper Use 2
Versions and variations 3
Classification in compliance with standard EN 60335-2-69 – Annexe AA 3
Dust emissions in the environment 3
General recommendations 3
CE Declaration of conformity 3

Vacuum cleaner description 4
Machine parts and labels 4
Optional kits 4
Accessories 5
Packing and unpacking 5
Unpacking, moving, use and storage 5
Setting to work - connection to the power supply 5
Extensions 6
Maintenance and repairs 6
Technical specifications 7
Dimensions 7
Safety devices 8
Controls, indicators and connections 8
Inspections prior to starting 8
Starting up 8
Vacuum cleaner operation 9
Shaking the primary filter 9
Emergency stopping 9
Emptying the dust container 9
Plastic bag 9
Versions for dusts harmful to health 9
Paper bag 9
Replacement of hazardous dust containers 10
At the end of a cleaning session 10
Maintenance, cleaning and decontamination 10
Primary and absolute filter disassembly and replacement 11
Primary filter replacement 11
HEPA filter replacement 11
Upstream HEPA filter replacement 12
Motor cooling fan inspection and cleaning 12
Tightness inspection 12
Separator cleaning and replacement (optional) 12
Belt tensioning and replacement (CTT series) 13
Vacuum cleaner disposal 13
Wiring diagrams 13
Recommended spare parts 13

Troubleshooting 14

GB

Translation of original instructions

Instructions for use

Read the operating instructions and comply with the important safety recommendations identified by the word **WARNING!**

Operator's safety

⚠ WARNING! ⚠

Before starting the vacuum cleaner, it is absolutely essential to read these operating instructions and to keep them ready at hand for consultation.
The vacuum cleaner can only be used by people who are familiar with the way it works and who have been explicitly authorised and trained for the purpose. Before using the vacuum cleaner, the operators must be informed, instructed and trained on how to work it and for which substances its usage is permitted including the safe method for removing and disposing of the vacuumed material.

⚠ WARNING! ⚠

The use of vacuum cleaner by people (including children) with limited physical and mental capacities or lacking in experience and knowledge is strictly forbidden, unless they are supervised by a person who is experienced in the use and safe handling of the machine.
Children must be supervised to make sure they will not play with the machine.

General information for using the vacuum cleaner

Use the vacuum cleaner in accordance with the laws in force in the country where it is used.
Besides the operating instructions and the laws in force in the country where the vacuum cleaner is used, the technical regulations for ensuring safe and correct operation must also be observed (Legislation concerning environmental and labour safety, i.e. European Union Directive 89/391/EC and successive Directives).
Do not perform any operation that could jeopardize the safety of people, property and the environment.
Comply with the safety indications and prescriptions in this instruction manual.

GB

Proper uses

This vacuum cleaner is suitable for commercial use, in hotels, schools, hospitals, factories, shops, offices and apartment hotels for example, for hire and in any case for purposes other than normal domestic use.
This vacuum cleaner was conceived to clean and collect solid non-flammable materials indoor and outdoor.
WARNING – This vacuum cleaner can only be used to vacuum dry materials.

- Always leave enough room around the vacuum cleaner to reach the controls easily.

The vacuum cleaner has been designed to be used by one operator at a time.
This vacuum cleaner consists of an automated vacuum unit, with a filter upstream and a container for collecting the vacuumed material.

Improper Use

⚠ WARNING! ⚠

The following use of the vacuum cleaner is strictly forbidden:

- ***Outdoors in case of atmospheric precipitation.***
- ***When not placed on horizontal levelled grounds.***
- ***When the filtering unit is not installed.***
- ***When the vacuum inlet and/or hose are turned to parts of the human body.***
- ***When the dust bag is not installed.***
- ***Use without the guards, protective covers and safety systems installed by the manufacturer.***
- ***When the cooling vents are partially or totally clogged.***
- ***When the vacuum cleaner is covered with plastic or fabric sheets.***
- ***When the air outlet is partially or totally closed.***
- ***When used in narrow areas where there is no fresh air.***
- ***Vacuuming the following materials:***
  1. ***Burning materials (embers, hot ashes, lit cigarettes, etc.).***
  2. ***Naked flames.***
  3. ***Combustible gas.***
  4. ***Flammable liquids, aggressive fuels (gasoline, solvents, acids, alkaline solutions, etc.).***
  5. ***Explosive dust/substances and/or ones liable to ignite in a spontaneous way (such as magnesium or aluminum dusts, etc.).***

IMPORTANT: Fraudulent use is not admitted.

Versions and variations

Versions

⚠ WARNING! ⚠

Dust classification
This vacuum cleaner is produced in two versions:
- ***Normal version: not suitable for vacuuming hazardous, combustible/explosive dust;***
- ***Version for dust harmful for the health: classes L - M - H. In this case, the vacuum cleaner is suitable for use with hazardous, non-combustible/non-explosive dust in accordance with standard EN 60335-2-69, par. AA. 2. 202 b), c).***
  Check the tolerated dust hazard class on the data plate and on the label on the vacuum cleaner: L (low risk), M (medium risk), H (high risk).

[NOTE]

- *In the case of dust harmful to health, contact the local health and safety authorities, and observe national regulations in force both during use and disposal.*
- *Radioactive substances are not included in the definition of the type of dust dust harmful to health described above.*

Variants

ATEX

The manufacturer produces vacuum cleaners suitable to be used in potentially explosive atmospheres. These variants are manufactured according to directives and standards in force. The relevant additional instructions are supplied together with the vacuum cleaner.

[NOTE]

ATEX variants
Refer to the manufacturer's sales network for these versions.
For ATEX industrial vacuum cleaners see the instructions for "ATEX" use.

Classification in compliance with standard EN 60335-2-69 – Annexe AA

Vacuum cleaners for dust harmful to health are classified according to the following dust classification:
- **L** (low risk) suitable for separating dust with an exposure limit value of over 1 mg/m^3, depending on the volume occupied;
- **M** (medium risk) suitable for separating dust with an exposure limit value of no lower than 0.1 mg/m^3, depending on the volume occupied;
- **H** (high risk) for separating all dust with an exposure limit value lower than 0.1 mg/m^3, depending on the volume occupied, including carcinogenic and pathogenic dusts, such as asbestos.

Dust emissions in the environment

Indicative values of performance:
- normal version (not suitable for vacuuming hazardous dust): retains at least 99% of the vacuumed particles (see EN60335-2-69, Annexe AA);
- version for dust harmful to health (L, M, H classes):
  L: retains at least 99% of the vacuumed particles (see EN60335-2-69, Annexe AA);
  M: retains at least 99.9% of the vacuumed particles (see EN60335-2-69, Annexe AA);
  H: retains at least 99.995% of the vacuumed particles (see EN60335-2-69, Annexe AA).

General recommendations

⚠ WARNING! ⚠

If an emergency situation occurs:
- ***filter breakage***
- ***fire outbreak***
- ***short-circuit***
- ***motor block***
- ***electric shock***
- ***etc.***

Turn the vacuum cleaner off, unplug it and request assistance from qualified personnel.

[NOTE]

Check the place of work and substances tolerated for the vacuum cleaner in ATEX variant.

⚠ WARNING! ⚠

The vacuum cleaners must not be used or stored outdoors in damp places.

These vacuum cleaners cannot be used in corrosive environment.

CE Declaration of conformity

Every vacuum cleaner comes with a CE Declaration of conformity. See fac-simile in fig. 23.

[NOTE]

The Declaration of conformity is an important document and should be kept in a safe place to be presented to the Authorities on request.

GB

Translation of original instructions

Vacuum cleaner description

Machine parts and labels

Figure 1

1. Identification plate which includes:
- Manufacturer's name and address
- Designation and model, including class (L, M or H)
- EC Mark
- Technical specifications
- Serial number
- Year of manufacture
- Weight (kg)

2. Warning label
(For L, M, H version)

3. Panel power plate
Indicates that the panel is powered by the voltage indicated on the data plate.

4. Attention plate
Draws the operator's attention to the fact that the filter must only be shaken when the vacuum cleaner is off. Failing this, the shaking would have no effect while the filter itself could be damaged.

5. Inlet

6. Outlet

7. Check valve (Clapet) (CTS series; L, M, H versions)

8. Vacuum unit (**A** CTS series, **B** CTT series)

9. On/off switch

10. Vacuum hose

11. Closing plug (M, H versions)

12. Band latch

13. Container release handle

14. Phase sequence indicator (CTT series)

Figure 2

1. L class label

2. M class label

3. H class label

The class L and M labels contain pictograms with the following meanings:

⚠ WARNING! ⚠

This vacuum cleaner contains dust hazardous for the health. Only authorised personnel wearing suitable personal protective equipment should empty and service the vacuum cleaner, including removing the means used to vacuum the dust. Do not use without the complete filter system in place.

The class H label contains the above text.

This vacuum cleaner creates a strong air flow which is drawn in through the inlet (**5**, Fig. 1) and blows out through the exhaust (**6**, Fig. 1). After the hose and tools have been fitted, make sure that the motor turns correctly.
The vacuum cleaner is supplied with a check valve (Clapet, CTS series) which prevents air and materials from coming out of the dust container, even if the electric motor rotates in the opposite direction than the one expected.
Before turning on the vacuum cleaner, fit the vacuum hose into the inlet and then fit the required tool on to the end part. Refer to the manufacturer's accessory catalogue or Service Centre.
The diameters of the authorised hoses are given in the technical specifications table.

The vacuum cleaner is equipped with a primary filter which enables it to be used for the majority of applications.

Besides the main filter which retains the more common types of dust, the vacuum cleaner can be fitted with an upstream absolute filter and a downstream absolute filter, with a higher filtering capacity for fine dust and substances harmful for the health.

Optional kits

Various optional kits are available for converting the vacuum cleaner:
- removable separator
- lifting bracket
- upstream absolute filter
- downstream absolute filter
- grill and depressor with bag
- safe bag system
- basket for accessories
- paper bag

On request, the vacuum cleaner can be supplied with optional kits already installed. However, they can also be installed at a later date.

Please contact the manufacturer's sales network for further details.

Instructions for installing the optional are included in the conversion kit.

⚠ WARNING! ⚠

Use only supplied and authorized genuine spare parts.

GB

Accessories

Various accessories are available; refer to the manufacturer's accessory catalogue.

⚠ WARNING! ⚠

ATEX variant: refer to the manufacturer's sales network.

⚠ WARNING! ⚠

Use only genuine accessories supplied and authorized by the manufacturer.

Packing and unpacking

Dispose of the packing materials in compliance with the laws in force.

Figure 3

Model	A (mm)	B (mm)	C (mm)	kg
CTS22 L, M	1,200	700	1,700	117
CTS40 L, M	1,200	700	1,700	131
CTT40 L, M	1,200	700	1,700	136
CTS22 H	1,200	700	1,700	122
CTS40 H BDC40 H	1,200	700	1,700	136
CTT40 H	1,200	700	1,700	141

Unpacking, moving, use and storage

Operate on flat, horizontal surfaces.

The load-bearing capacity of the surface the vacuum cleaner is placed on must be suitable for bearing its weight.

Setting to work - connection to the power supply

⚠ WARNING! ⚠

- ***Make sure there is no evident sign of damage to the vacuum cleaner before starting work.***
- ***Before plugging the vacuum cleaner into the electrical mains, make sure the voltage rating indicated on the data plate corresponds to that of the electrical mains.***
- ***Plug the vacuum cleaner into a socket with a correctly installed ground contact/connection. Make sure that the vacuum cleaner is turned off.***
- ***The plugs and connectors of the connection cables must be protected against splashes of water.***
- ***Check that for proper connection to the electrical mains.***
- ***Use the vacuum cleaners only when the cables that connect to the electrical mains are in perfect condition (damaged cables could lead to electric shocks!).***
- ***Regularly check there are no signs of damage, excessive wear, cracks or ageing on the electric cable.***

⚠ WARNING! ⚠

When the vacuum cleaner is operating, do not:

- ***Crush, pull, damage or tread on the cable that connects to the electrical mains.***
- ***Only disconnect the cable from the electrical mains by removing the plug (do not pull the cable).***
- ***Only replace the electric power cable with one of the same type as the original: H07 RN - F. The same rule applies if an extension is used.***
- ***The cable must be replaced by the manufacturer's Service Centre staff or by equivalent qualified personnel.***

GB

Translation of original instructions

Extensions

If an extension cable is used, make sure it is suitable for the power input and protection degree of the vacuum cleaner.

⚠ WARNING! ⚠

ATEX variant: extensions, plugged in electrical devices and adapters cannot be used when the vacuum cleaner is used for flammable dust.

Minimum section of extension cables:
Maximum length = 20 m
Cable = H07 RN - F

Max power (kW)	3	5
Minimum section (mm^2)	2.5	4

⚠ WARNING! ⚠

Sockets, plugs, connectors and installation of the extension cable must maintain the IP protection degree of the vacuum cleaner, as indicated on the data plate.

⚠ WARNING! ⚠

The vacuum cleaner's power socket must be protected by a differential circuit-breaker with surge current limitation, that shuts off the power supply when the current discharged to the ground exceeds 30 mA for 30 msec. or an equivalent protection circuit.

⚠ WARNING! ⚠

Never spray water on the vacuum cleaner: this could be dangerous for persons exposed and could short circuit the power supply.

⚠ WARNING! ⚠

Comply with the safety regulations governing the materials for which the vacuum cleaner is used.

GB

Maintenance and repairs

⚠ WARNING! ⚠

Disconnect the vacuum cleaner from its power source before cleaning, servicing, replacing parts or converting it to obtain another version/variant, the plug must be removed from the socket.

- ***Carry out only the maintenance operations described in this manual.***
- ***Use only original spare parts.***
- ***Do not modify the vacuum cleaner in any way.***

Failure to comply with these instructions could jeopardize your safety. Moreover, such action would immediately void the EC declaration of conformity issued with the vacuum cleaner.

Translation of original instructions

Technical specifications

Parameter	Units	CTS22	CTS22 L, M, H	CTS40 L, M, H BDC40 H	CTT40 L, M, H
Voltage (50 Hz)	V	400		400	400
Power rating	kW	2.2		4	4
Power rating (EN 60335-2-69) (50 Hz)	kW	2.1		2.7	3.4
Noise level	dB(A)	68		70	73
Protection	IP	55		55	55
Insulation	Class	F		F	F
Container capacity	L	50		50	50
Inlet (diameter)	mm	70		70	70
Max vacuum	hPa - mbar	300 - 300		/	180 - 180
Max vacuum with limiting valve	hPa - mbar	/	210 - 210	230 - 230	/
Maximum air flow rate(without hose and reductions)	m^3/h - L/min'	318 - 5,300		420 - 7,000	534 - 8,900
Maximum air flow rate (with hose, length: 3 m, diameter: 50 mm)	m^3/h - L/min'	235 - 3,915		280 - 4,670	355 - 5,915
Hoses allowed for “L” and “standard” classes (diameter)	mm	70(*)/50		70(*)/50	70/50
Hoses allowed for “M” and “H” classes (diameter)	mm	/	50	50	50
Main filter surface for “standard”, “L” and “M” classes	m^2	1.95		1.95	1.95
Upstream absolute “H” filter surface - HEPA 14 according to MPPS method (EN 1882)	m^2	2.4		2.4	2.4
Downstream “ULPA 15” absolute filter surface	m^2	1.1		1.1	1.1
“Version standard, L and M” weight	kg	100		114	119
“Version H” weight	kg	105		119	124

(*) Only for non-ATEX use

Dimensions

Figure 4

Model	CTS22 CTS22 L-M-H	CTS40 L-M-H BDC40 H	CTT40 L-M-H
A (mm)	1,050	1,050	1,050
B (mm)	600	600	600
C (mm)	1,250	1,250	1,250

(1) Net weight

- *Storage conditions:*
  T : -10°C ÷ +40°C
  Humidity: 85%
- *Operating conditions:*
  Maximum altitude: 800 m
  (Up to 2,000 m with reduced performances)
  T : -10°C ÷ +40°C
  Humidity: 85%

GB

Translation of original instructions

Safety devices

Figure 5

1. Vacuum unit (CTS series)
2. Centrifugal turbines and electric motor (CTT series)
3. Limiting valve (CTS series, L, M, H versions)
4. Clapet (CTS series)

⚠ WARNING! ⚠

Do not tamper any limiting valve setting.

Controls, indicators and connections

Figure 6

1. Dust container release lever
2. Castor lever
3. Manual filter shaker knob
4. Vacuum gauge
5. Start/stop switch
6. Phase sequence red indicator (CTT series)
7. Cover band lever
8. Safety bolt (H class)
9. Electric power cable
10. Handle
11. Filter shaker stop hook
12. Inlet plug

Inspections prior to starting

Figure 7

1. Inlet

Prior to starting, check that:
- the filters are installed
- all latches are tightly locked
- the vacuum hose and tools have been correctly fitted into the inlet (**1**)
- the bag or safety dust container is installed, if applicable.

⚠ WARNING! ⚠

Do not use the vacuum cleaner if the filter is faulty.

GB

Starting up

Figure 8

⚠ WARNING! ⚠

Lock the castor brakes (1) before starting the vacuum cleaner.

Starting/stopping the vacuum cleaner
- Turn the switch (**2**) to “I” position to start the vacuum cleaner.
- Turn the switch to “0” position to stop the vacuum cleaner.

Checking the rotation direction of the vacuum unit motor
- Check the vacuum cleaner operation by putting a hand on the inlet

1st CTS22
If the vacuum cleaner expels the air from the vacuum hose, the rotation direction is not correct; remove the plug from the socket and ask for assistance from qualified personnel to perform the correct phase connection.

2nd CTS22 L, M, H - CTS40 L, M, H - BDC40 H
If the vacuum cleaner does not vacuum any air, the rotation direction is not correct; remove the plug from the socket and ask for assistance from qualified personnel to perform the correct phase connection.

3rd CTT40 L, M, H
The activation of the red indicator (**3**) located over the switch (**2**) signals the wrong rotation direction of the motor ; remove the plug from the socket and ask for assistance from qualified personnel to perform the correct phase connection.

Vacuum cleaner operation

Figure 9

Vacuum gauge (**2**): green zone (**3**), red zone (**1**)

Check the flow rate:

- when the vacuum cleaner is operating, the pointer of the vacuum gauge must remain in the green zone (**3**) to ensure that the speed of the intake air does not drop below the safety value of 20 m/sec;
- if the pointer is in the red zone (**1**) it means that the speed of the air in the vacuum hose is less than 20 m/s and that the vacuum cleaner is not operating in safety conditions. The filters must be shaken or replaced.
- during normal operation conditions, close the vacuum hose, the pointer of the vacuum gauge must switch from the green zone (**3**) to the red zone (**1**).

⚠ WARNING! ⚠

If the vacuum cleaner belongs to the M or H class, use only hoses with diameters that comply with the indications in the Technical data table.
This is done in order to prevent the air speed from dropping below 20 m/sec.

⚠ WARNING! ⚠

When the vacuum cleaner is operating, always check that the vacuum gauge pointer remains in the green zone (3).
Consult the "Troubleshooting" chapter if faults occur.

Shaking the primary filter

Depending on the vacuumed dust quantity and if the pointer of the vacuum gauge (Fig. 9) switches from the green zone (**3**, Fig.9) to the red zone (**1**, Fig. 9) turn the vacuum cleaner off and shake the main filter by means of the knob (**1**, Fig. 10).

⚠ WARNING! ⚠

Stop the vacuum cleaner before shaking the filter.
Do not shake the filter while the vacuum cleaner is on, as this could damage the filter itself.

Wait before restarting the vacuum cleaner, to allow the dust to settle. Replace the filter element if the pointer still remains in the red zone (**1**, Fig. 9) even after the filter has been shaken (consult the "Primary filter replacement" paragraph).

Emergency stopping

Turn the main switch to "0" position.

Emptying the dust container

⚠ WARNING! ⚠

- ***Before proceeding with these operations, turn off the vacuum cleaner and remove the plug from the power socket.***
- ***Check the class of the vacuum cleaner.***

Before emptying the container it is advisable to shake the filter (see "Shaking the main filter" paragraph).

- Normal version not suitable for vacuuming hazardous dust
  - Release the dust container (**1**, Fig. 11), then remove and empty it.
  - Make sure the seal is in perfect condition and correctly positioned.
  - Place the container back in position and secure it again.

Plastic bag

A plastic bag can be used to collect dust (see Fig. 11).
In this case, the vacuum cleaner must be equipped with optional accessories [depressor (**3**) and grid (**2**), Fig. 11].

Versions for dusts harmful to health

- Classes L, M, H suitable for vacuuming hazardous and/or carcinogenic dust (H class)

Paper bag

Class M vacuum cleaners are supplied with a paper dust bag - code 81584000 (Fig. 12).
Class M vacuum cleaners must always be used with this paper bag installed. If the paper bag is not installed or is installed incorrectly, this could create health risks for persons exposed.

GB

Translation of original instructions

Replacement of hazardous dust containers

⚠ WARNING! ⚠

- ***These operations can only be carried out by trained and qualified personnel who must wear adequate clothing, in compliance with the laws in force.***
- ***Take care not to raise dust when this operation is carried out. Wear a P3 protective mask.***
- ***In case of hazardous and/or harmful dust, use only the bags recommended by the manufacturer (see "Recommended spare parts").***
- ***The container and/or bag must only be disposed of by qualified personnel and in compliance with the laws in force.***

Replacement of the paper bag (Fig. 12)

Remove and put the vacuum hose in a safe and dust-free place.

- Close the inlet by using the relevant cap (**1**).
- Release the dust container.
- Remove the paper bag from the deflector and close it hermetically with the supplied plug.
- Insert a new paper bag taking care that it is tight with the deflector.
- Replace the dust container in the vacuum cleaner.

How to replace the safe bag for class H vacuum cleaners (Fig. 13)

- Remove and put the vacuum hose in a safe and dust-free place.
- Close the inlet by using the relevant cap (**1**).
- Release the dust container. Remove the bag making sure that the union tubular element is kept connected to the inlet.
- Close the plastic bag hermetically.
- Tighten the clamp (**2**) to close the inlet hermetically.
- Remove the union element (**3**) from the dust container inlet.
- Insert a new safe bag making sure that the bag inlet is sealed.
- Wrap the plastic bag around the dust container external wall.

⚠ WARNING! ⚠

In case of ATEX industrial vacuum cleaners, ensure that the dust container lock lever is not covered by the plastic bag, and that the container conductivity is checked.

- Set the dust container into the vacuum cleaner again.

⚠ WARNING! ⚠

Before inserting the bag, remove the tubular element so that it does not obstruct the input air.

At the end of a cleaning session

- Turn off the vacuum cleaner and remove the plug from the socket.
- Wind the connection cable around the handle (Fig. 14).
- Empty the container as described in the "Emptying the container" paragraph.
- Clean the vacuum cleaner as described in the paragraph "Maintenance, cleaning and decontamination".
- Wash the container with clean water if aggressive substances have been vacuumed.
- Store the vacuum cleaner in a dry place, out of reach of unauthorized people.
- Shut the inlet with the appropriate plug (**1**, Fig. 14) when the vacuum cleaner is transported or not being used (particularly in the case of M, H versions).

Maintenance, cleaning and decontamination

⚠ WARNING! ⚠

To guarantee the safety level of the vacuum cleaner, only original spare parts supplied by the manufacturer should be used.

⚠ WARNING! ⚠

The precautions described below must be taken during all the maintenance operations, including cleaning and replacing of the main and HEPA filters.

- To allow the user to carry out the maintenance operations, the vacuum cleaner must be disassembled, cleaned and overhauled as far as is reasonably possible, without causing hazards for the maintenance staff or other people. The suitable precautions include decontamination before disassembling the vacuum cleaner, adequate filtered ventilation of the exhaust air from the room in which it is disassembled, cleaning of the maintenance area and suitable personal protection.
- If the vacuum cleaner belongs to the M or H class, the external parts must be decontaminated by cleaning and vacuuming methods, dedusted or treated with sealant before being taken out of a hazardous zone.
  All parts of the vacuum cleaner must be considered as contaminated when they are removed from the hazardous zone and appropriate actions must be taken to prevent dust from dispersing.
  When maintenance or repair procedure are carried out, all the contaminated elements that cannot be properly cleaned, must be eliminated.
  These elements must be disposed of in sealed bags in accordance with applicable regulations and local laws on the disposal of such material.
  This procedure must also be followed when the filters are eliminated (main, HEPA and downstream filters).
  Compartments that are not dust-tight must be opened with suitable tools (screwdrivers, wrenches, etc.) and thoroughly cleaned.

GB

- A check must be carried out by the manufacturer or the personnel of the same at least once a year. For example: Check the air filters to find out whether the air-tightness of the vacuum cleaner has been impaired in any way and make sure that the electric control panel operates correctly.

⚠ WARNING! ⚠

In particular, on Class H vacuum cleaners, the filtering efficiency of the vacuum cleaner must be checked at least once a year, or more often if required by national legislation. The test method for checking the filtering efficiency of the vacuum cleaner is indicated in standard EN 60335-2-69, par. AA.22.201.2.
If the test isn't passed, it must be repeated after the class H filter has been changed.

Primary and absolute filter disassembly and replacement

⚠ WARNING! ⚠

When the vacuum cleaner is used to vacuum hazardous substances, the filters become contaminated, therefore:
- ***work with care and avoid spilling the vacuumed dust and/or material;***
- ***place the disassembled and/or replaced filter in a sealed plastic bag;***
- ***close the bag hermetically;***
- ***dispose of the filter in accordance with the laws in force.***

⚠ WARNING! ⚠

Filter replacement is a serious matter. The filter must be replaced with one of identical characteristics, filtering surface and category.
Otherwise the vacuum cleaner will not operate correctly.

Primary filter replacement

Figure 15

1. Suction hose
2. Release lever
3. Cover

⚠ WARNING! ⚠

Check the vacuum cleaner class (L, M, H).

Take care not to raise dust when this operation is carried out. Wear a P3 mask and other protective clothing plus protective gloves (DPI) suited to the hazardous nature of the dust collected, refer to the laws in force.
Before proceeding with these operations, turn off the vacuum cleaner and remove the plug from the power socket.

- Remove the clamp (**4**).
- Remove the vacuum hose (**1**).
- Use the lever (**2**) to remove the cover (**3**) together with the primary filter.
- Remove the old filter from the cage.
- Fit the new filter and secure it in the cage with special clamps.
- Install the cover and the primary filter in the reverse order of removal.
- Dispose of the old filter according to the laws in force.

If necessary contact the manufacturer's Service Centre.

HEPA filter replacement

Version for dust harmful for the health: Class H

⚠ WARNING! ⚠

Take care not to raise dust when this operation is carried out. Wear a P3 mask and other protective clothing plus protective gloves (DPI) suited to the hazardous nature of the dust collected, refer to the laws in force.

⚠ WARNING! ⚠

Do not use the Class H filter again after having removed it from the vacuum cleaner.

GB

Translation of original instructions

Upstream HEPA filter replacement

Figure 16

1. Filter shaker stop
2. Filter operating knob
3. Cover
4. Lever
5. Safety bolt
6. Stop nut (absolute filter)
7. Absolute filter holder disc
8. Primary filter
9. Clamp fixing screw
10. Primary filter fixing clamp
11. Absolute filter
12. Vacuum hose
13. Vacuum hose clamp

- Stop the vacuum cleaner.
- Loosen the clamp (**13**) with a screwdriver and remove the vacuum hose (**12**).
- Unlock the filter shaker stop (**1**).
- Unscrew the knob (**2**).
- Unlock the safety bolt (**5**).
- Use the lever (**4**) to remove the cover (**3**).
- Loosen the screw (**9**) of the primary filter (**8**) fixing clamp (**10**) using a screwdriver.
- Remove the filter holder disc (**7**) with the absolute filter installed and unscrew the nut (**6**).
- Remove the absolute filter (**11**).
- Cover the absolute filter (**11**) with a plastic bag, close the plastic bag hermetically and dispose of the filter in accordance with the laws in force.
- Insert a new filter (**11**) with the same filtering characteristics as the removed one.
- Lock the absolute filter with the nut (**6**).
- Tighten the clamp (**10**) screw (**9**) fixing the primary filter (**8**) to the absolute filter holder disc (**7**).
- Insert the the cover (**3**) again.
- Close the cover hermetically by means of the lever (**4**) and lock the safety bolt (**5**) again.
- Tighten the knob (**2**) and lock it using the filter shaker stop (**1**).
- Fit the vacuum hose (**12**) back in place and tighten the calmp (**13**).

[NOTE]

If the vacuum cleaner is ATEX variant: perform galvanic continuity tests as shown in the relevant manual. Standard EN 60335-2-69 prescribes inspections at regular intervals or after repairs or modifications.

Motor cooling fan inspection and cleaning

⚠ WARNING! ⚠

These operations can only be carried out by trained and qualified personnel

Periodically clean the motor cooling fan to prevent the motor from overheating, especially if the vacuum cleaner is used in a dusty place. (See Fig. 5)

Tightness inspection

Hoses check

Make sure that connecting hoses (**1**, Fig.17 for CTT models and **2**, Fig. 17 for CTS models) are in a good condition and correctly fixed.
If the hoses are damaged, broken or badly connected to the unions, they must be replaced.
When sticky materials are treated, check for possible clogging along the hose (**3**, Fig. 17), in the inlet and on the baffle plate inside the filtering chamber.
Scrape inlet (**3**, Fig. 17) from the outside and remove the deposited waste as indicated in figure 17.

Filtering chamber tightness check

If the gasket (**1**, Fig. 18) between the container and the filtering chamber (**3**) fails to guarantee tightness:

- Loosen the four screws (**2**) that lock the filtering chamber (**3**) against the vacuum cleaner structure.
- Allow the filtering chamber (**3**) to lower down and tighten the screws (**2**) once it has reached the tightness position.

The gasket must be replaced if it is torn, cut, etc.
Replace the gasket (**1**) if the degree of tightness is still not optimum.

Separator cleaning and replacement (optional)

[NOTE]

If there is only a dust deposit on the separator (3, Fig. 19) allow the dust to drop through the central hole.

The separator (**3**, Fig. 19) should first be disassembled in order to be perfectly cleaned:

- Use the lever (**1**) to remove the cover (**2**) together with the primary filter.
- Unscrew the two screws and remove it from the container.

Replace the part if it is excessively worn.
Assemble the components in the reverse order of disassembly.

GB

Belt tensioning and replacement (CTT series)

Figure 21

⚠ WARNING! ⚠

When replacing the belts, only use genuine spare parts or spare parts with the same characteristics as the old ones.

⚠ WARNING! ⚠

These operations can only be carried out by trained and qualified personnel

⚠ WARNING! ⚠

After about 1 hour of operation, check belt tensioning again.

It is very important that the transmission belt is installed with the correct tension, in order to optimize its performance and life.
To obtain the correct transmission belt tension, use the following method:

- Loosen the the four adjusting plate (**1**) fixing screws.
- Loosen the nut (**2**) and operate on the screw (**3**) to adjust the transmission belt (**4**) tension.
- Measure the deflection of the indicated section, which should be 5 - 6 mm in the central part using a force of 50 N perpendicular to the same belt.
- Lock the nut (**2**) and the four adjusting plate fixing screws (**1**).

Vacuum cleaner disposal

Figure 20

Dispose of the vacuum cleaner in compliance with the laws in force.

– Proper disposal (electric and electronic waste). (Applicable in the European Union and in countries providing a separate collection system)

The above symbol (Fig. 20), which is present on the product or in its documentation, indicates that the product cannot be disposed of together with other domestic waste at the end of its life cycle.
To prevent damage to the environment or health caused by improper waste disposal, please separate this product from other waste and recycle it responsibly in order to support the sustainable reutilisation of material resources.
This product can not be disposed of together with other commercial waste.

Wiring diagrams

Basic vacuum cleaner

Figure 22

1. Power cable with plug
2. Blower (CTS series) or electric motor (CTT series)
3. On/off switch

Ref.	A diagram		B diagram
	CTS22	CTS40 BDC40 H	CTT40
1	8 39937	8 39937	8 39937
2	4 55030 HP 3	4 55050 kW 4	4085700325
3	8 39915	8 39916	8 39318

Recommended spare parts

The following is a list of spare parts that should be kept ready at hand in order to speed up maintenance operations:

	L	M	H
Primary filter	8 17080	8 17245	
Absolute filter	8 17455		
Filter chamber gasket	40000762		
Filter gasket	8 17026		
Main filter tightening clamp	8 18079		
Paper dust filter (5 bags)	81584000		- -
Safe Bag	- -	- -	8 40874
Transmission belt (CTT40 series)	4084600035		

Refer to the manufacturer’s spare parts catalogue when ordering spare parts.

GB

Translation of original instructions

Troubleshooting

Problem	Cause	Remedy
The vacuum cleaner suddenly stops	Clogged primary filter	Shake the filter. Replace it if necessary
	Clogged vacuum hose	Check the vacuum hose and clean it.
	Circuit breaker activation	Check the setting. Check the motor electrical input. Contact an authorized after-sales service centre if necessary.
Dust leaks from the vacuum cleaner	The filter is torn	Replace it with another of identical type.
	Inadequate filter	Replace it with another of a suitable category and check.
The vacuum cleaner blows instead of vacuuming	Incorrect connection to the electrical mains	Ask for assistance from qualified personnel to perform the correct phase connection. See page 8, Starting up chapter
Electrostatic current on the vacuum cleaner	Non existent or inefficient grounding	Check all ground connections. Especially check the inlet.

GB

1

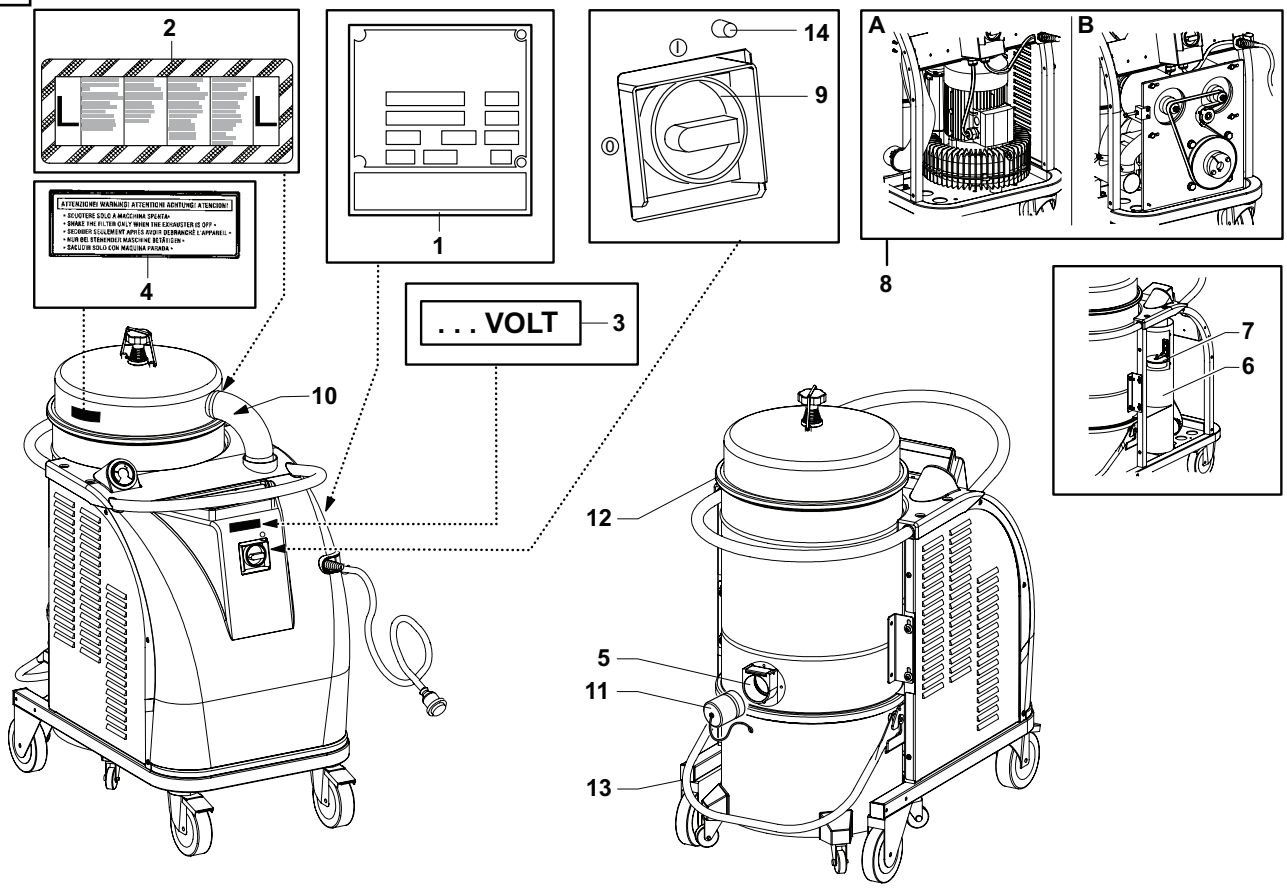

2

1

2

3

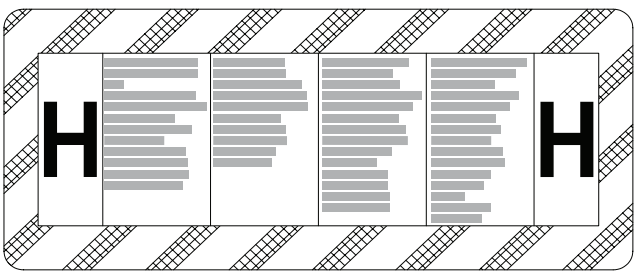

3

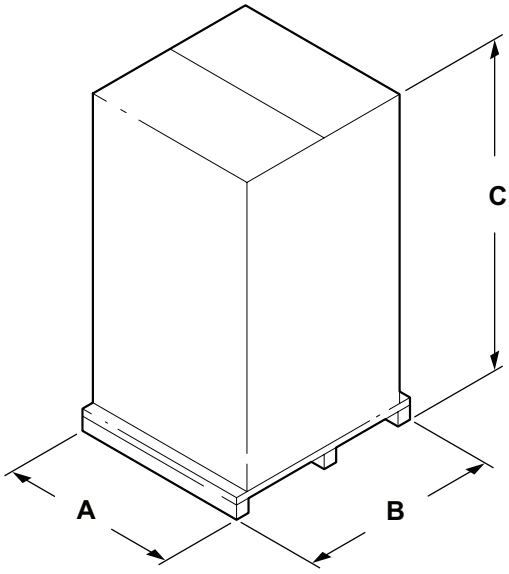

4

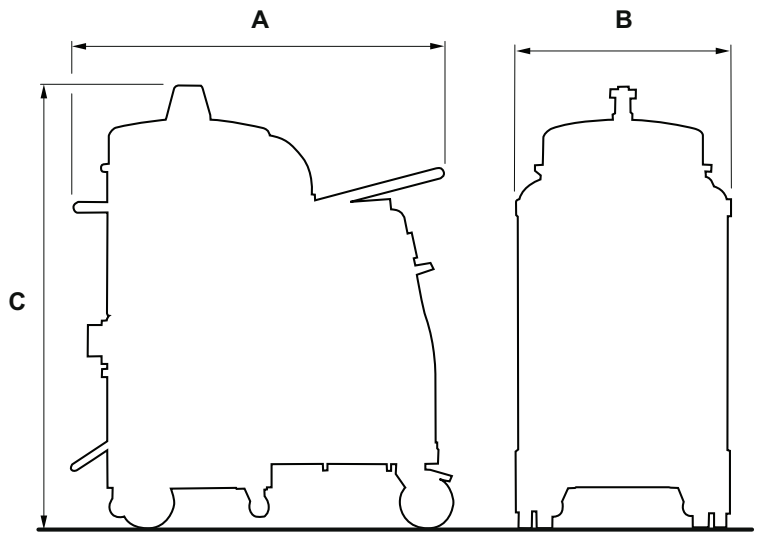

5

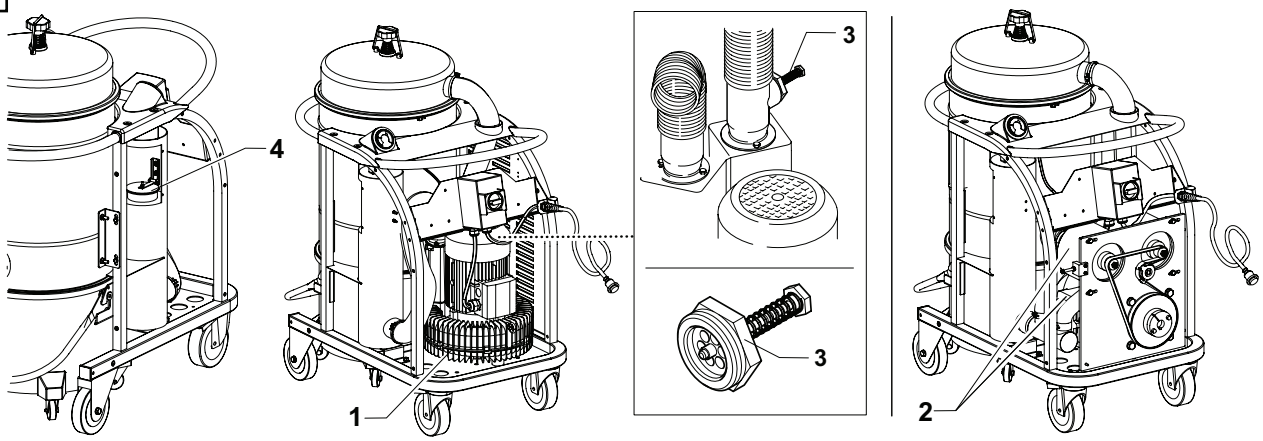

6

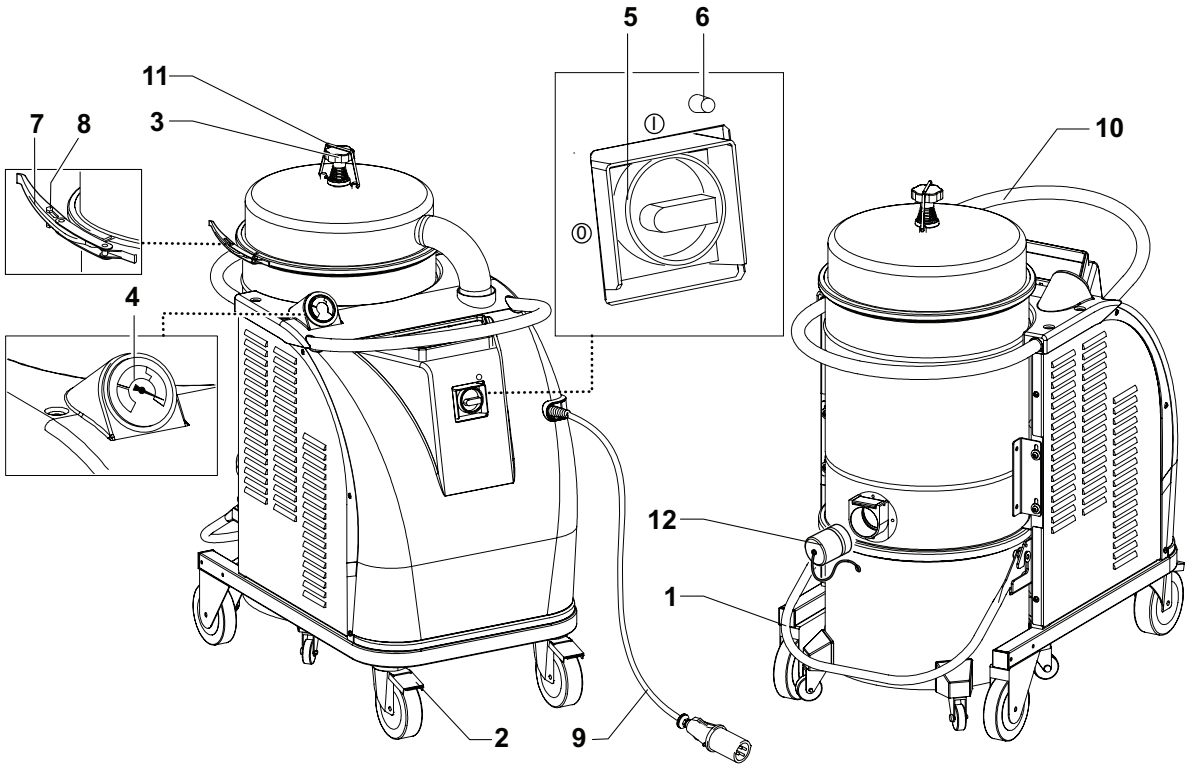

7

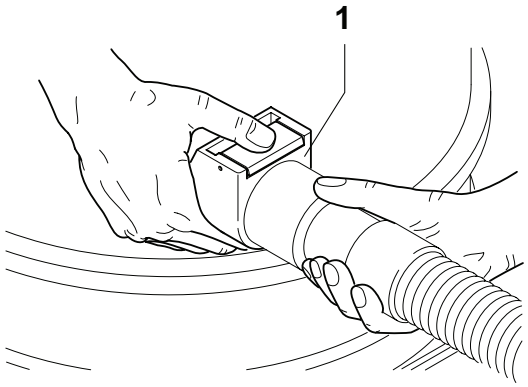

8

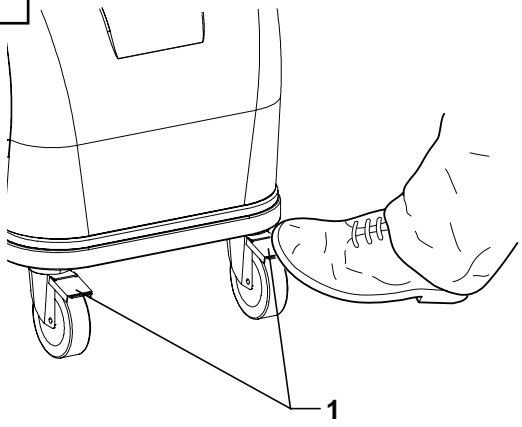

CTS

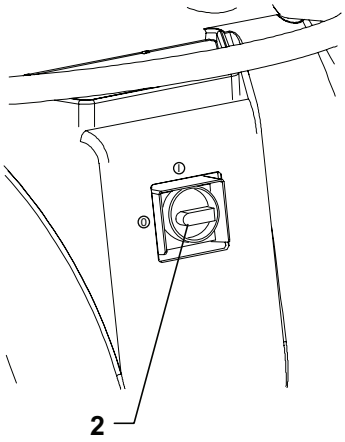

CTT

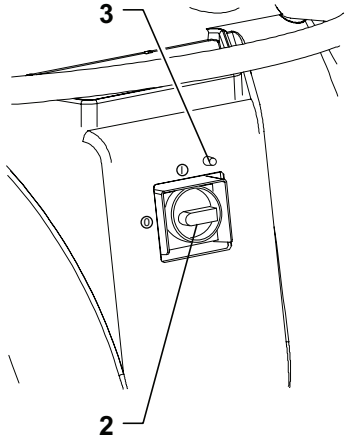

9

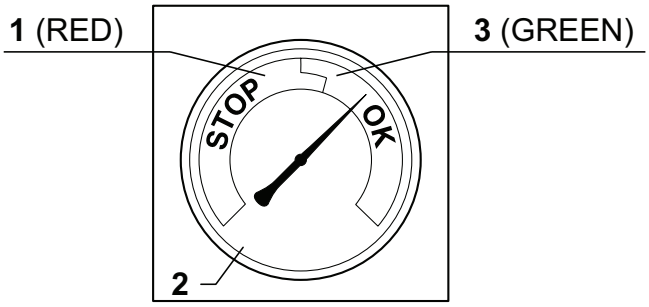

10

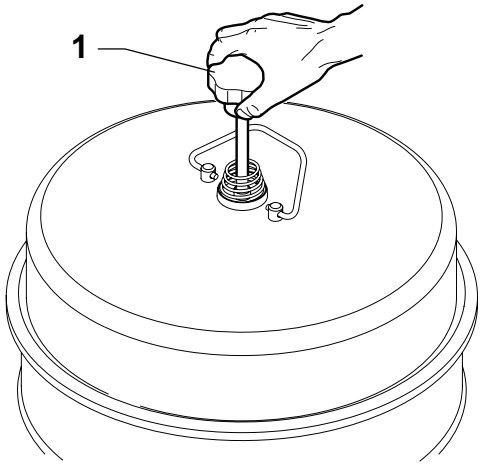

11

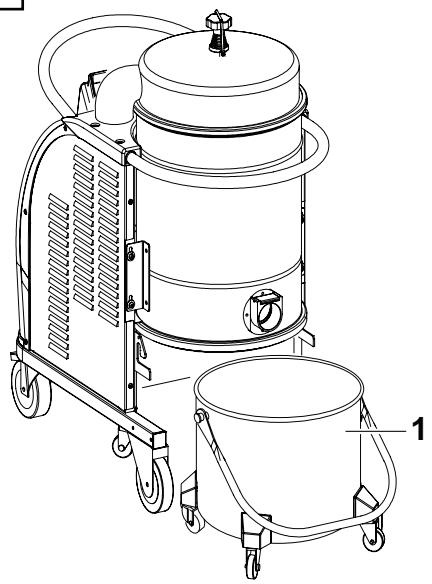

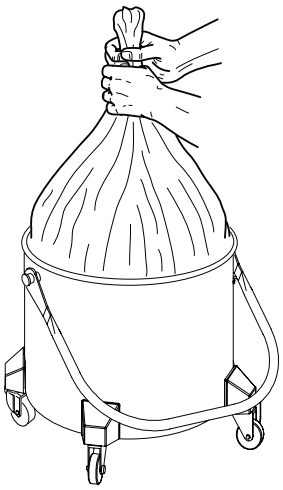

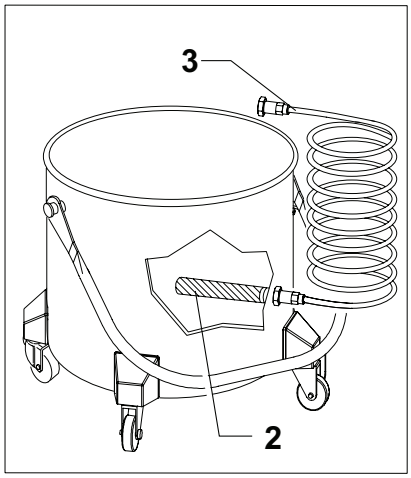

12

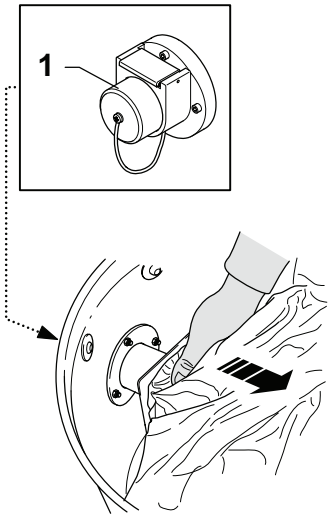

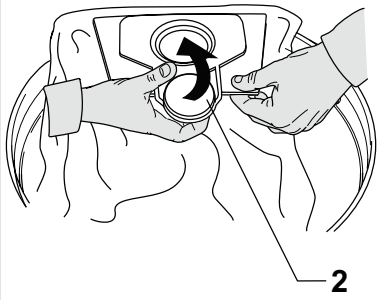

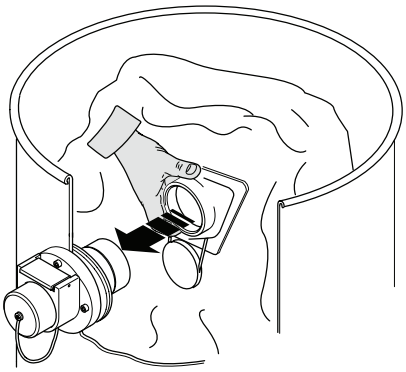

13

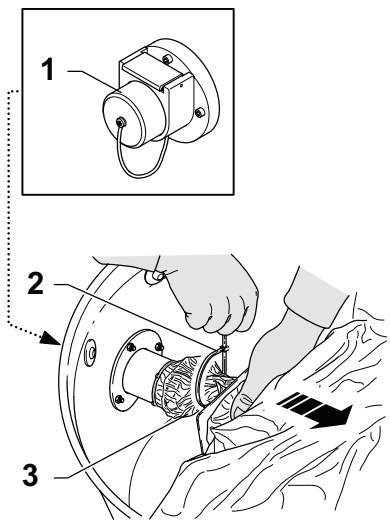

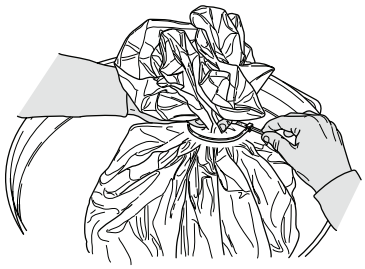

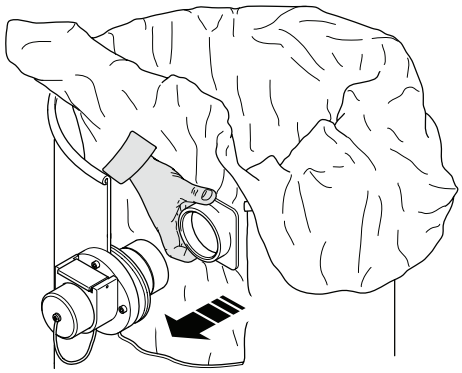

14

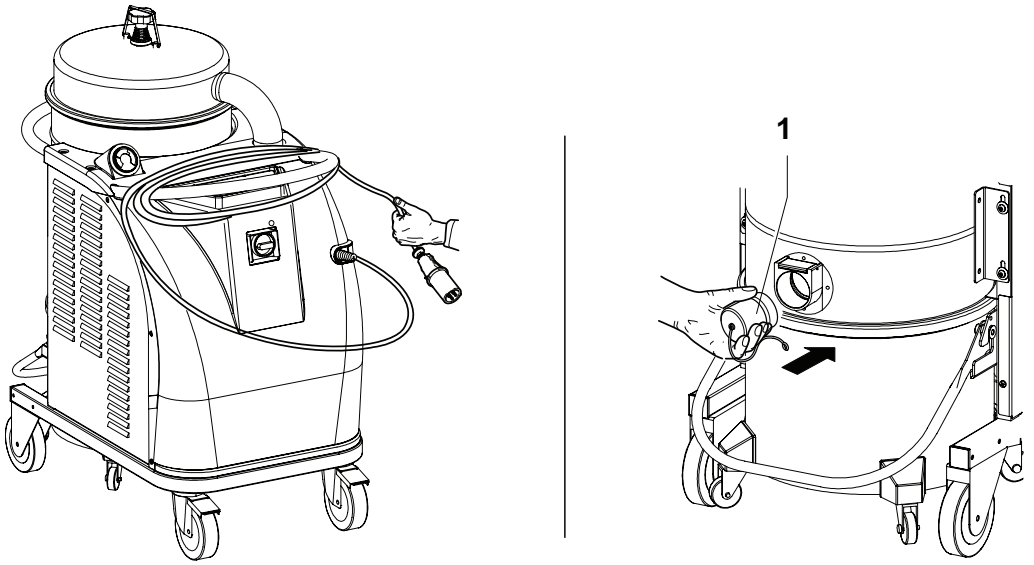

15

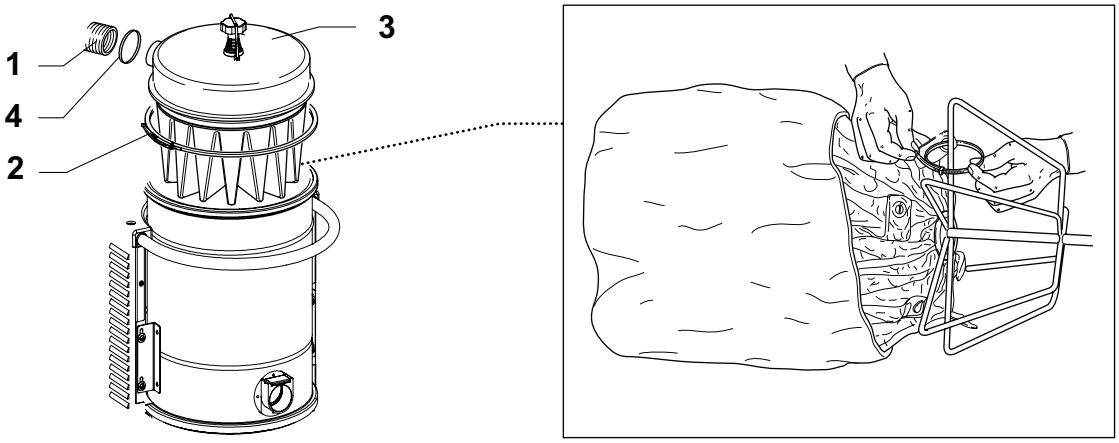

16

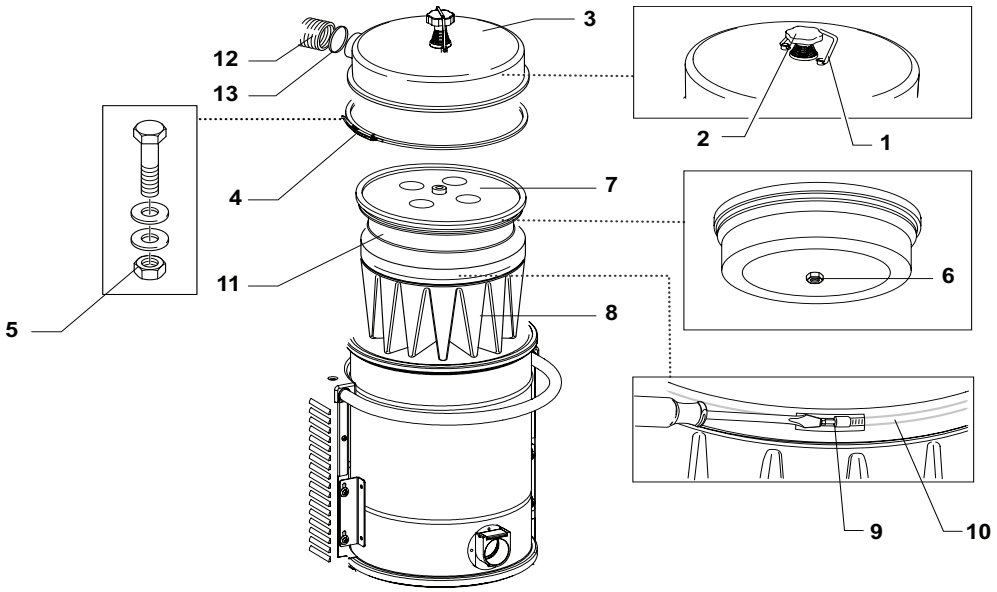

17

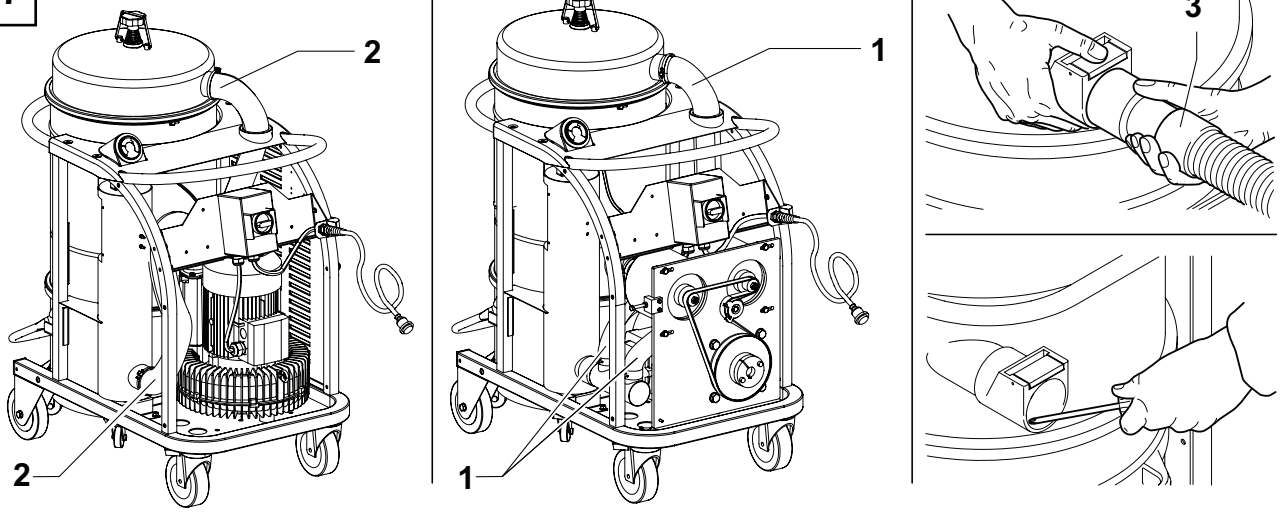

18

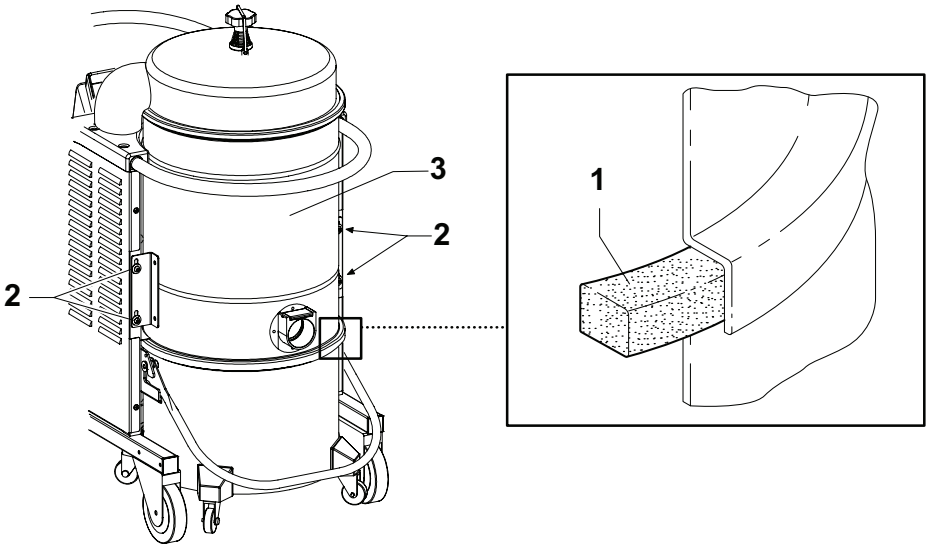

19

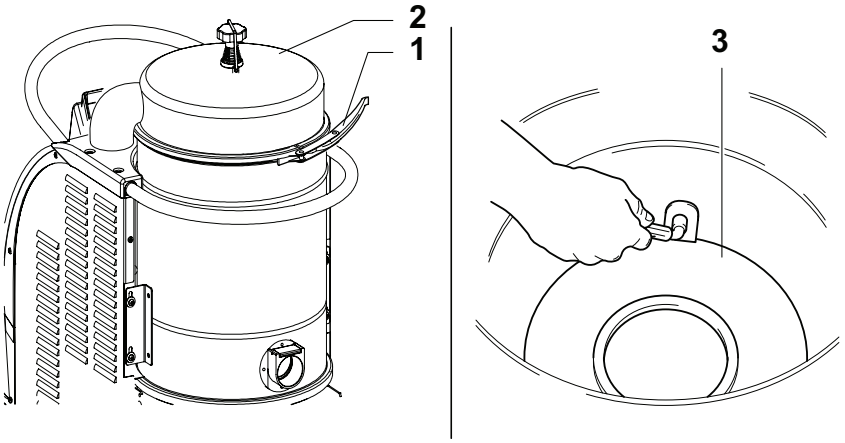

20

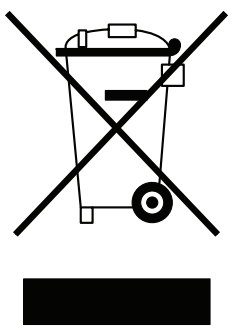

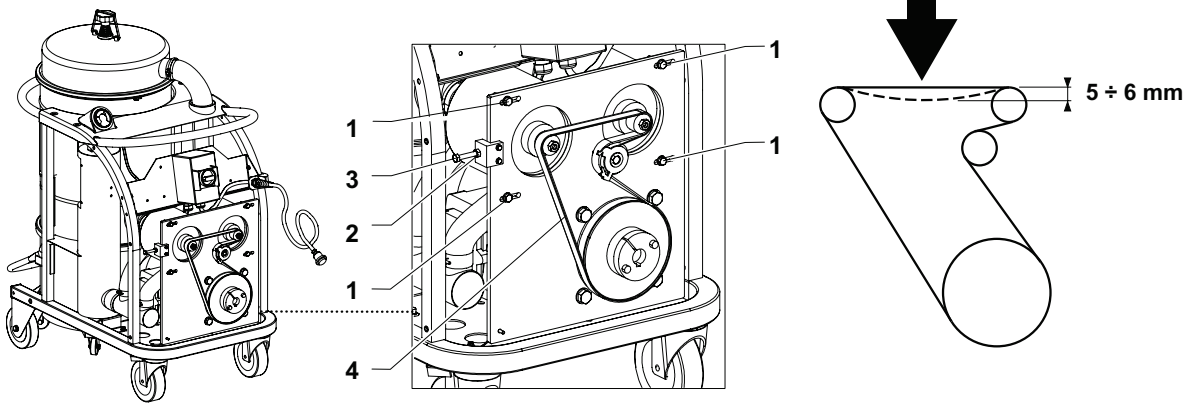
50 N
5 ÷ 6 mm
1
1
3
2
1
4
1
1

22

A

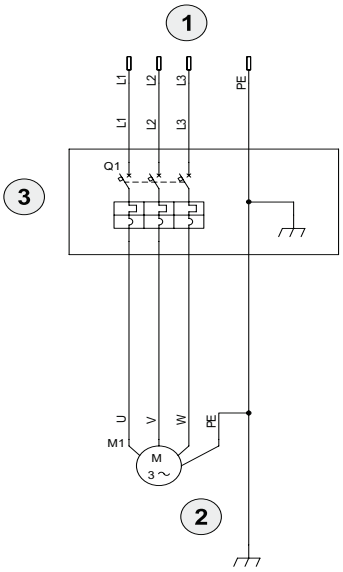
1
L1
L2
L3
PE
L1
L2
L3
Q1
3
U
V
W
PE
M1
M
3~
2

B

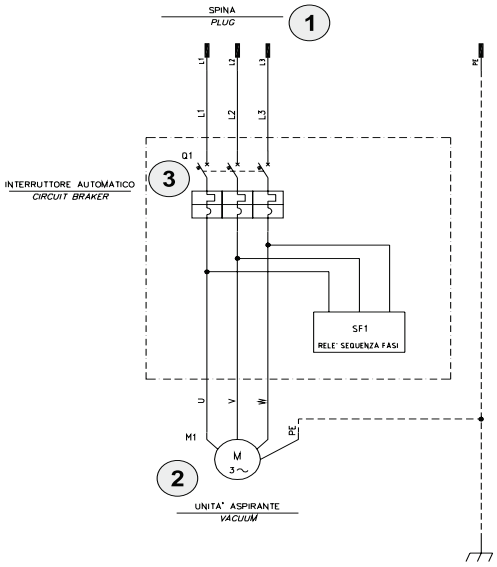
SPINA
PLUG
1
L1
L2
L3
PE
L1
L2
L3
Q1
INTERRUTTORE AUTOMATICO
CIRCUIT BRAKER
3
SF1
RELE' SEQUENZA FASI
U
V
W
PE
M1
M
3~
2
UNITA' ASPIRANTE
VACUUM